嘉尼企業股份有限公司CANAL ELECTRONIC CO.,LTD.

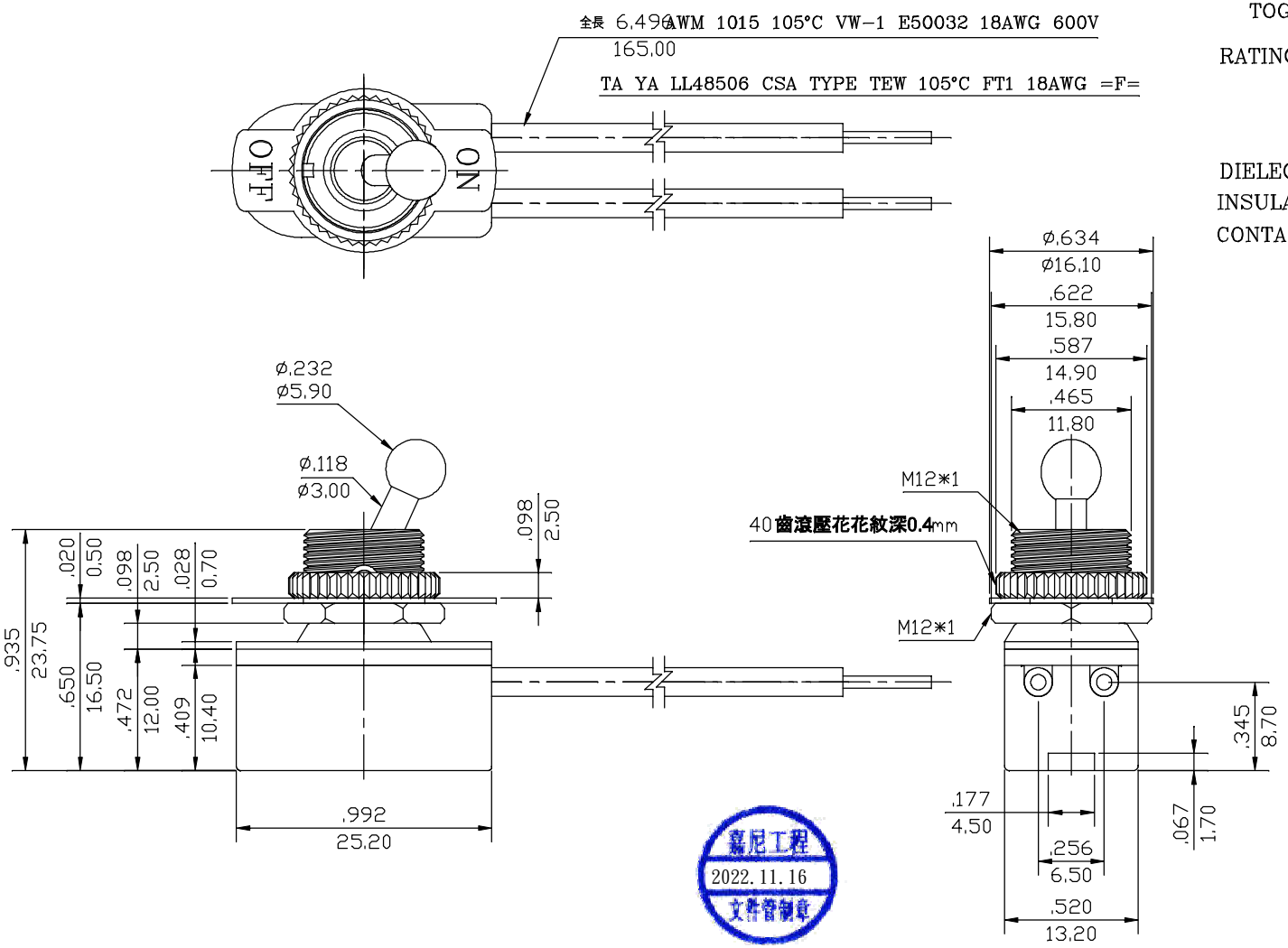

TOGGLE SWITCH MODEL: TA SERIES

RATING:(1) 6A 125VAC (CURus)
(2) 3A 250VAC (CURus)
(3) 3A 125VAC "L" (CURus)

DIELECTRIC WITHSTAND VOLTAGE: 1000VAC 1 MIN
INSULATION RESISTANCE:100MΩ (MIN)
CONTACT RESISTANCE:20mΩ (MAX.)

SWITCHING CIRCUIT

嘉尼工程
2022.11.16
文件管制章

NOTE: TOLERANCES UNLESS OTHERWISE SPECIFIED:$\pm\frac{0.012}{0.3}$(in/mm)

REVISION	DESCRIPTION	REVISED BY	TOLEANCES .X .XX ANGLE ½°				UNIT mm		PART NAME	TA MODEL DRAWING	DWG NO
4			DRAWN BY	沈思偉	DESIGNED BY	沈思偉	SCALE	3/2			S0780B
3											
2 2022.11.16	安規修改		CHECKED BY		APPROVED BY		DATE	2000.07.23	PART NO	TA-01A-A	
1 2004.11.26	依總表將料號TA更為TA-01A-A	沈思偉									